f = 1 / (2*pi*R*C)

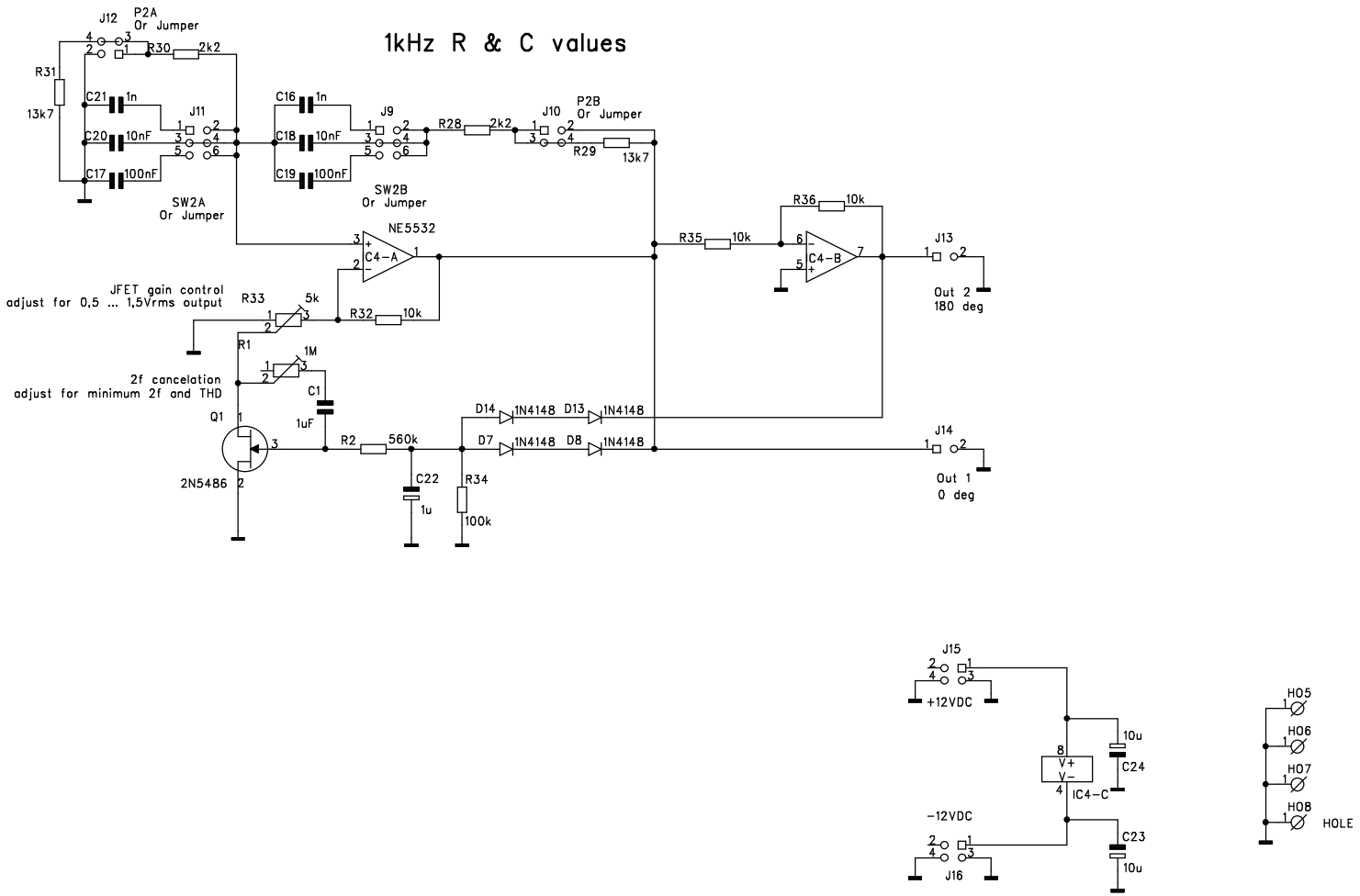

Audio oscillator	OH2NLT	Drawn	18.02.2019	JNi
Wien Bridge test osc, tuned JFET control	DRAWING No. Rev. Tests 17.3.2019	Appr.		Page 2